Predictable, continuous and efficient power systems engineered for organisations with zero tolerance for downtime. All Z Series systems are built on a Megawatt frame.

CleanSource® UPS

Multi-Module Systems 1000 Z-Frame

battery-free energy storage | high reliability | 98% Efficiency | 120 150 | 250 - 500 - 750 - 1000 kVA | 380/400/415 V

System Features

- *Rugged, on-line and fault-tolerant UPS*
- *Most efficient UPS architecture*
- *Handles multi-load characteristics*
- *Cost-effective lifecycle cost*
- *Modular and redundant architecture*
- *Predictable flywheel energy storage*
- *20-year design life*
- *Low service and maintenance requirements*
- *Smallest available footprint*
- *Rapid recharge time*
- *Predictive failure analysis*
- *Wide operating temperature range*
- *Remote and local monitoring*
- *Fault compartmentalisation*
- *Simple and cost-effective installation*
- *Field-proven reliability*
- *No hazardous waste material*

Parallel Online Architecture

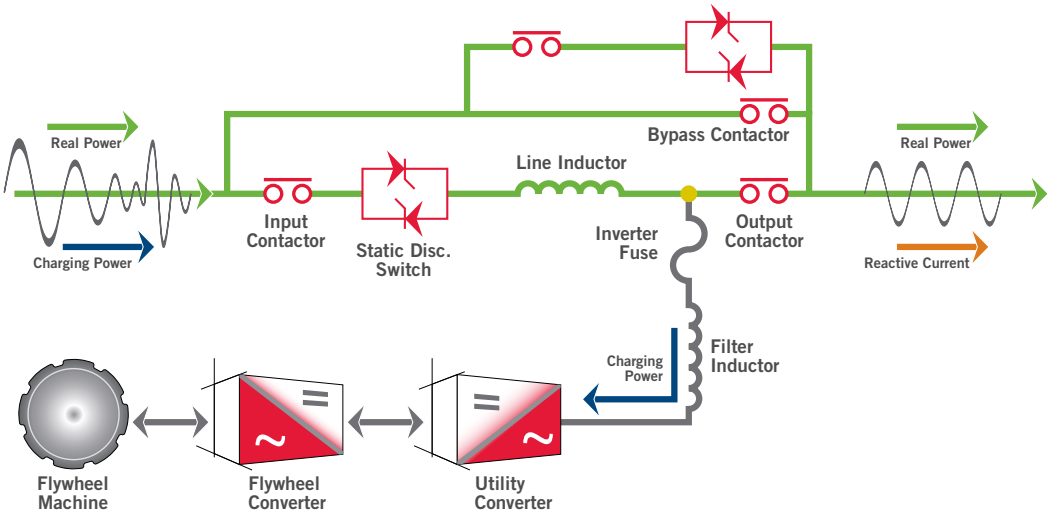

intelligently EFFICIENT | inherently RELIABLE | economically GREEN

Standard Ride-through Times (seconds)

Load%	Time 250iEZ	500iZ	750iZ	1000iZ
100%	15	15	15	15
75%	20	20	20	20
50%	30	30	30	30
25%	56	56	56	56

FACTORY INSTALLED EQUIPMENT

Standard

- CSView™ – advanced real-time monitoring
- IGBT-based UPS technology
- Flywheel energy storage
- Superior power conditioning
- High-speed voltage regulation
- High overload capacity
- Static bypass circuit
- User-friendly control panel
- Redundant cooling fans
- Redundant control power
- Power factor correction
- Intelligent self-diagnostics
- Serial connections
- Back-feed protection
- Harmonic cancellation

Optional

- Remote SNMP/MODBUS monitoring capability
- Remote status panel
- Seismic provisions
- Separate bypass input
- Redundant flywheel and UPS
- Upgrade capability from 250 to 1000kVA
- External synchronization input
- GenSTART™ Generator Start Power

PRODUCT SPECIFICATIONS

MODEL	UPS 250iEZ	UPS 500iZ	UPS 750iZ	UPS 1000iZ
RATING				
Maximum kVA	250	500	750	1000
Maximum kW	225	450	675	900
INPUT				
Voltage	380/400/415 VAC 3-phase, 4-wire plus ground (from grounded wye source)			
Voltage Range	+10% / -15% (programmable) +/- 10% at 380 VAC			
Frequency[1]	50 Hz +/- 10% maximum (programmable) +/- 3% (default)			
Power Factor	0.99 at rated load and nominal voltage			
Harmonic Current Distortion				
Linear Load	<3% at 100% load			
Non-Linear Load[2]	<8% at 100% load			
Current - Nominal (380 VAC)	355	709	1,064	1,419
Current - Nominal (400 VAC)	337	674	1,011	1,348
Current - Nominal (415 VAC)	325	650	974	1,299
Current - Max. Continuous	400	800	1,200	1,600
Current - Max. Non-Continuous	420	840	1,260	1,680
Surge Withstand	Meets IEEE 587/ANSI C62.41			
Walk-In	1 to 15 seconds (programmable)			
OUTPUT				
Voltage	380/400/415 VAC 3-phase, 4-wire plus ground			
Voltage regulation				
Steady state	+/-1% for +/-10% input			
Flywheel mode	+/-1% steady state			
Transient	+/-1% within 50 mSec for 100% load step			
Voltage distortion	<3% linear loads and <5% for 100% non-linear loads			
Frequency	50Hz (mains synchronised) (normal operation +/- 0.2% free running)			
Slew Rate	Adjustable from 0.2Hz/second to 3.0Hz/second			
Current - Nominal (380 VAC)	380	761	1,141	1,521
Current - Nominal (400 VAC)	361	723	1,084	1,445
Current - Nominal (415 VAC)	348	696	1,045	1,393
Overload Capability-Mains Operation	Continuous Up to 105%	10 Min 125%	2 Min 150%	30 Sec 200% / 10 mSec >200%
UPS Efficiency[4]	97%	98%		
Environmental				
Audible Noise	<72 dBA at 1 meter		<75 dBA at 1m	
Temperature				
Operating	0 to 40° C			
Storage	-25 to 70° C			
Humidity	5% to 95% (non-condensing)			
Altitude[3]	Up to 1,000 metre			
Emissions and Immunity	EN 50091-2			
Maximum Heat Rejection[5]				
kW	5.8	11.7	17.5	23.4
BTU/Hr	19,946	39,893	59,839	79,786
PHYSICAL DATA				
Height (w/o wireway or DC bus)	1,981 mm	1,981 mm	1,981 mm	1,981 mm
Width	3,226 mm	4,318 mm	5,410 mm	6,502 mm
Depth	865 mm	865 mm	865 mm	865 mm
Weight	3,365 kg	5,435 kg	7,475kg	9,520 kg
Cable Entry	Top or Bottom			
Safety	EN64040-1-1			

[1] 60Hz Available
[2] EN59001-3
[3] Derate operating temperature for higher elevations
[4] DC energy storage offline
[5] DC energy storage online

World Headquarters
2128 W. Braker Lane, BK12 • Austin, Texas 78758-4028
Tel: 877.BUY.ACPW • Fax: 512.836.4511
sales@activepower.com

EMEA • Active Power Solutions Ltd. (UK)
Unit 4A • Lauriston Business Park • Pitchill • Evesham
Worcestershire WR118SN • United Kingdom
Tel: +44 1386 870 006 • Fax: +44 1386 870 806
emea@activepower.com

www.activepower.com

ACTIVE POWER

©®™ 2008 Active Power, Inc. All rights reserved. Materials and specifications are subject to change without notice.
All trademarks designated herein are the sole property of Active Power.
CSMMSZ-EN-1008